CrustBuster
SPEED KING INC.

5500 Drill

Owner's Manual

OPERATION • MAINTENANCE • REPAIR PARTS

(03-09) # 609412

Identification

Your CrustBuster® drill is identified by a Serial Number and Model Number. Record these numbers in the spaces provided in this manual and refer to them when ordering parts or requesting service.

Serial Number	Model Number

Warranty

WARRANTY: In addition to the implied warranties of fitness and of merchantability, CrustBuster®/Speed King, Inc. warrants new products sold by it to be free from defects in workmanship and material for a period of 12 months, from the date of delivery to the first user customer. Warranty on purchased parts (cylinder, blades, bearings, shanks, etc.) will be the same as that offered by the appropriate manufacturer of these parts.

EXCLUSIONS: No warranty of any kind is made by CrustBuster®/Speed King, Inc. with regard to new products which have been subject to operation in excess of recommended capacities, misuse, abuse, negligence, or accident, or have been altered or repaired in any manner not authorized by CrustBuster®/Speed King, Inc. CrustBuster®/Speed King, Inc. is constantly striving to improve its products. Changes in design and improvement will be made whenever CrustBuster®/Speed King, Inc. believes the efficiency of its products will be improved thereby, but without incurring any obligation to incorporate such improvements in any products which have been shipped or are in service. No obligation exists for compensation of unauthorized repairs or modifications without prior approval. And in no event will CrustBuster®/Speed King, Inc. be liable for consequential damages, such as but not limited to: downtime, delayed or late tillage or planting, etc.

WARRANTY REGISTRATION: This warranty is not valid unless registered with CrustBuster®/Speed King, Inc. within 10 days from the date of purchase. It is the sole responsibility of the selling retail dealer to fill out the registration forms and see that they are properly filed with CrustBuster®/Speed King, Inc.

WARRANTY PROCEDURE: Should any part fail to conform with this warranty, CrustBuster®/Speed King, Inc. will repair or replace the part or parts which do not conform. If a part is defective, take it to your authorized CrustBuster® Farm Equipment Dealer immediately, along with your warranty registration, and complete the proper forms requesting a warranty adjustment. Our representative will pick up the part to be returned to the factory for examination. If the customer (first user) requests that a new part be substituted for the old part, a new part will be charged to the dealer who will in turn charge the customer. If the part is found by us to be defective, a credit for the part will be given to the dealer to be passed on to the customer. If the dealer or customer wishes to repair the part, this will be done only if authorized by CrustBuster®/Speed King, Inc. This warranty procedure is in addition to all remedies authorized by law.

CRUSTBUSTER®/SPEED KING, INC.
Box 1438
Dodge City, KS 67801

Specifications are subject to change without notice. CrustBuster® is a registered trademark of CrustBuster/Speed King, Inc.

Table of Contents

Identification & Warranty . . . . . Inside Cover
Safety 2-7
Lubrication, Maintenance, and Service 7
Field Operating Checklist 8
Field Preparation 8
Transporting 8
Setting Down Pressure & Seed Depth 9
Wobble Slot Seed Cup 10
Chain Tension on Drive Shaft 10
Calibration & Seed Rates 11
30" Row Set-up 12
36" Row Set-ups 13
Sprocket Locations 14
Seed Rate Charts 15-18

Repair Parts:
- Frame 19
- Grain Box 20-21
- Drive 22-23
- Opener 24
- Blade Assembly 25
- Bearing & Flange Assembly 25
- Feed Tubes 25
- Extensions 26
- Shaft & Bin Monitor System 27

BE A SAFE OPERATOR
BY THINKING BEFORE ACTING
AND
BY READING
YOUR OWNER'S MANUAL

Avoid Accidents

Most accidents, whether they occur in industry, on the farm, at home, or on the highway, are caused by the failure of some individual to follow simple and fundamental safety rules or precautions. For this reason most accidents can be prevented by recognizing the real cause and doing something about it before the accident occurs.

Regardless of the care used in the design and construction of any type of equipment, there are many conditions that cannot be completely safeguarded against without interfering with reasonable accessibility and efficient operation.

A CAREFUL OPERATOR
is the Best Insurance Against an Accident.
The complete observance of one simple rule would prevent many thousands of serious injuries each year.

That rule is:

Never Attempt to
Clean, Oil, or Adjust
A Machine While It Is In Motion.

To Our Customers

The following pages and illustrations are printed to help supply you with the knowledge to better operate and service your new CrustBuster equipment.

We are proud to have you as a customer and feel you will be proud to be a CrustBuster owner.

Any piece of equipment needs, and must have, a certain amount of service and maintenance to keep it in top running condition. We have attempted to cover all the adjustments required to fit most conditions; however, there may be times when special care must be taken to fit a condition.

Study this owner's manual carefully and become acquainted with all the adjustments and operating procedures before attempting to operate your new equipment. Remember, it is a machine and has been designed and tested to do an efficient job in most operating conditions and will perform in relation to the services it receives.

If special attention is required for some condition, ask your CrustBuster dealer; he will be glad to help and answer any questions on operations and service of your new machine.

TAKE TIME FOR SAFETY

Safety

RECOGNIZE SAFETY INFORMATION

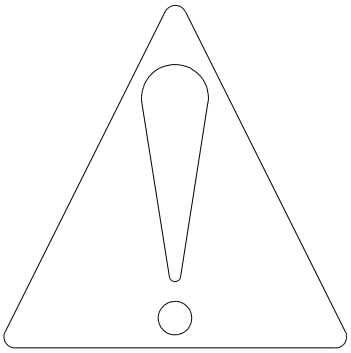

THIS IS THE SAFETY-ALERT SYMBOL. WHEN YOU SEE THIS SYMBOL ON YOUR MACHINE OR IN THIS MANUAL, BE ALERT TO THE POTENTIAL FOR PERSONAL INJURY.

FOLLOW RECOMMENDED PRECAUTIONS AND SAFE OPERATING PRACTICES.

UNDERSTAND SIGNAL WORDS

DANGER

WARNING

CAUTION

A SIGNAL WORD-DANGER, WARNING, OR CAUTION-IS USED WITH THE SAFETY-ALERT SYMBOL. DANGER IDENTIFIES THE MOST SERIOUS HAZARDS.

DANGER OR WARNING SAFETY SIGNS ARE LOCATED NEAR SPECIFIC HAZARDS. GENERAL PRECAUTIONS ARE LISTED ON CAUTION SAFETY SIGNS. CAUTION ALSO CALLS ATTENTION TO SAFETY MESSAGES IN THIS MANUAL.

FOLLOW SAFETY INSTRUCTIONS

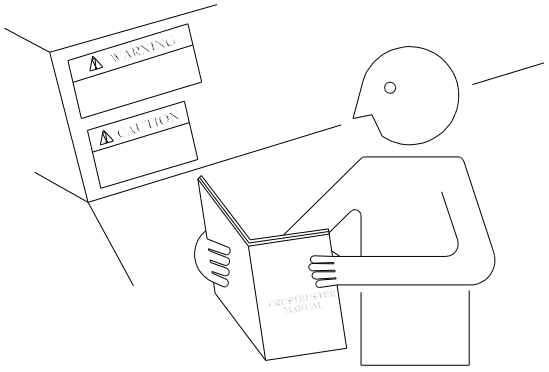

CAREFULLY READ ALL SAFETY MESSAGES IN THIS MANUAL AND ON YOUR MACHINE SAFETY SIGNS. KEEP SAFETY SIGNS IN GOOD CONDITION. REPLACE MISSING OR DAMAGED SAFETY SIGNS. BE SURE NEW EQUIPMENT COMPONENTS AND REPAIR PARTS INCLUDE THE CURRENT SAFETY SIGNS. REPLACEMENT SAFETY SIGNS ARE AVAILABLE FROM YOUR CRUSTBUSTER DEALER.

LEARN HOW TO OPERATE THE MACHINE AND HOW TO USE CONTROLS PROPERLY. DO NOT LET ANYONE OPERATE WITHOUT INSTRUCTION.

KEEP YOUR MACHINE IN PROPER WORKING CONDITION. UNAUTHORIZED MODIFICATIONS TO THE MACHINE MAY IMPAIR THE FUNCTION AND/OR SAFETY AND AFFECT MACHINE LIFE.

IF YOU DO NOT UNDERSTAND ANY PART OF THIS MANUAL AND NEED ASSISTANCE, CONTACT YOUR CRUSTBUSTER DEALER.

Safety

OPERATE SAFELY

DO NOT OPERATE DRILL WITH MORE THEN ONE PERSON ON THE TRACTOR.

DO NOT ALLOW ANYONE TO RIDE ON THE DRILL.

DO NOT OPERATE CLOSE TO A DITCH OR CREEK.

DRIVE SLOWLY OVER ROUGH GROUND.

SHIFT THE TRACTOR INTO A LOWER GEAR WHEN OPERATING ON STEEP SLOPES.

IF YOUR TRACTOR IS EQUIPPED WITH A ROLL-GUARD SAFETY CANOPY AND A SEAT BELT, BE SURE TO KEEP YOUR SEAT BELT FASTENED WHEN OPERATING OR TRANSPORTING THE DRILL.

HANDLE AND APPLY CHEMICALLY TREATED SEEDS ACCORDING TO MANUFACTURER'S RECOMMENDATIONS. PROPERLY DISPOSE OF UNUSED TREATED SEEDS AND THEIR CONTAINERS.

ALWAYS SHUT OFF TRACTOR ENGINE AND SHIFT TO PARK WHEN LEAVING TRACTOR. REMOVE KEY WHEN LEAVING TRACTOR UNATTENDED.

AVOID TIP-OVERS

USE A SEAT BELT UNDER ALMOST ALL OPERATING CONDITIONS.

AVOID HOLES, DITCHES, AND OBSTRUCTIONS WHICH MAY CAUSE THE MACHINE TO TIP, ESPECIALLY ON HILLSIDES.

NEVER DRIVE NEAR THE EDGE OF A GULLY OR STEEP EMBANKMENT-IT MIGHT CAVE IN.

SLOW DOWN FOR HILLSIDES, ROUGH GROUND, AND SHARP TURNS.

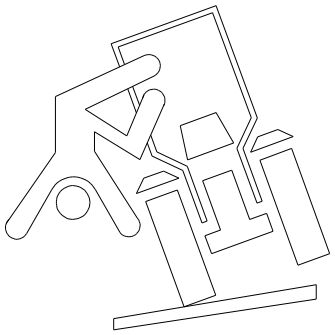

KEEP RIDERS OFF MACHINE

ONLY ALLOW THE OPERATOR ON THE MACHINE. KEEP RIDERS OFF.

RIDERS ON MACHINE ARE SUBJECT TO INJURY SUCH AS BEING STRUCK BY FOREIGN OBJECTS AND BEING THROWN OFF OF THE MACHINE. RIDERS ALSO OBSTRUCT THE OPERATOR'S VIEW RESULTING IN THE MACHINE BEING OPERATED IN AN UNSAFE MANNER.

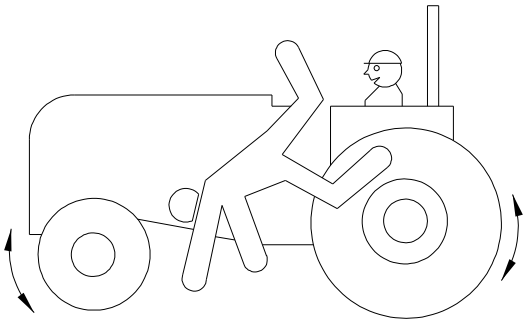

Safety

HANDLE FUEL SAFELY - AVOID FIRES

HANDLE FUEL WITH CARE: IT IS HIGHLY FLAMMABLE.

DO NOT REFUEL THE MACHINE WHILE SMOKING OR WHEN NEAR OPEN FLAME OR SPARKS.

ALWAYS STOP ENGINE BEFORE REFUELING MACHINE. FILL FUEL TANK OUTDOORS.

PREVENT FIRES BY KEEPING MACHINE CLEAN OF ACCUMULATED TRASH, GREASE, AND DEBRIS. ALWAYS CLEAN UP SPILLED FUEL.

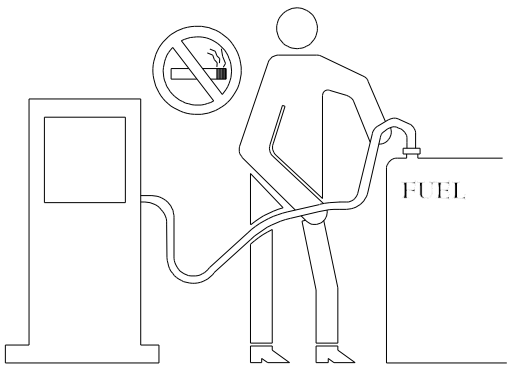

PREPARE FOR EMERGENCIES

BE PREPARED IF A FIRE STARTS.

KEEP A FIRST AID KIT AND FIRE EXTINGUISHER HANDY.

KEEP EMERGENCY NUMBERS FOR DOCTORS, AMBULANCE SERVICE, HOSPITAL, AND FIRE DEPARTMENT NEAR YOUR TELEPHONE.

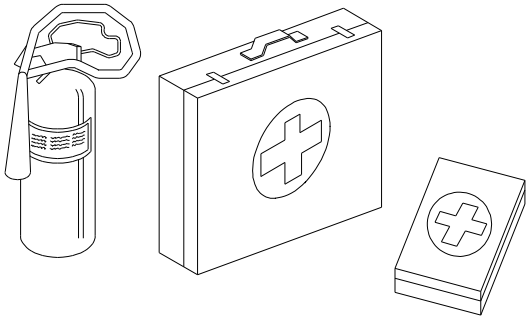

PRACTICE SAFE MAINTENANCE

UNDERSTAND SERVICE PROCEDURE BEFORE DOING WORK. KEEP AREA CLEAN AND DRY.

NEVER LUBRICATE, SERVICE, OR ADJUST MACHINE WHILE IT IS MOVING. KEEP HANDS, FEET, AND CLOTHING FROM POWER DRIVEN PARTS. DISENGAGE ALL POWER AND OPERATE CONTROLS TO RELIEVE PRESSURE. LOWER EQUIPMENT TO THE GROUND. STOP THE ENGINE. REMOVE THE KEY. ALLOW MACHINE TO COOL.

SECURELY SUPPORT ANY MACHINE ELEMENTS THAT MUST BE RAISED FOR SERVICE WORK.

KEEP ALL PARTS IN GOOD CONDITION AND PROPERLY INSTALLED. FIX DAMAGE IMMEDIATELY. REPLACE WORN OR BROKEN PARTS. REMOVE ANY BUILDUP OF GREASE, OIL, OR DEBRIS.

DISCONNECT BATTERY GROUND CABLE (-) BEFORE MAKING ADJUSTMENTS ON ELECTRICAL SYSTEMS OR WELDING ON MACHINE.

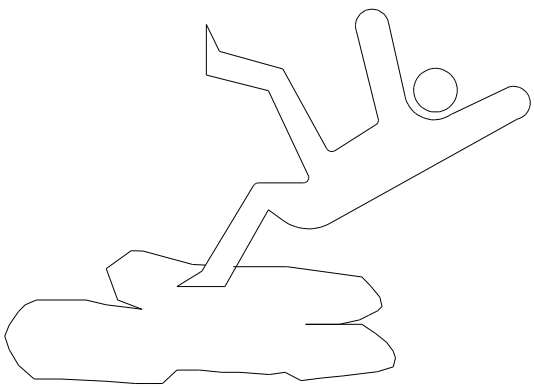

Safety

WEAR PROTECTIVE CLOTHING

WEAR CLOSE FITTING CLOTHING AND SAFETY EQUIPMENT APPROPRIATE TO THE JOB.

OPERATING EQUIPMENT SAFELY REQUIRES THE FULL ATTENTION OF THE OPERATOR. DO NOT WEAR RADIO OR MUSIC HEADPHONES WHILE OPERATING MACHINE.

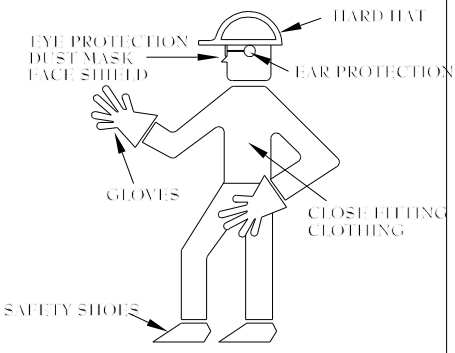

USE SAFETY LIGHTS AND DEVICES

PREVENT COLLISIONS BETWEEN OTHER ROAD USERS, SLOW MOVING TRACTORS WITH ATTACHMENT OR TOWED EQUIPMENT, AND SELF-PROPELLED MACHINES ON PUBLIC ROADS. FREQUENTLY CHECK FOR TRAFFIC FROM THE REAR, ESPECIALLY IN TURNS, AND USE HAND SIGNALS OR TURN SIGNAL LIGHTS.

USE HEADLIGHTS, FLASHING WARNING LIGHTS, AND TURN SIGNALS DAY AND NIGHT. FOLLOW LOCAL REGULATIONS FOR EQUIPMENT LIGHTING AND MARKING. KEEP LIGHTING AND MARKING VISIBLE AND IN GOOD WORKING ORDER. REPLACE OR REPAIR LIGHTING AND MARKING THAT HAS BEEN DAMAGED OR LOST. AN IMPLEMENT SAFETY LIGHTING KIT IS AVAILABLE FROM YOUR CRUSTBUSTER DEALER.

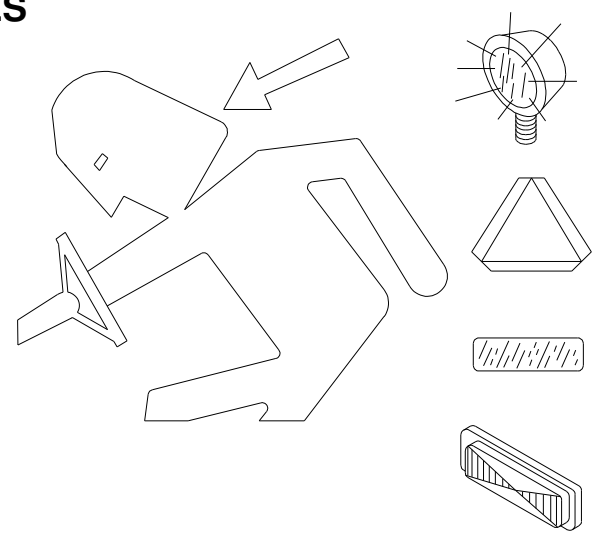

TRANSPORT SAFELY

ALWAYS RAISE THE JACK STANDS BEFORE TRANSPORTING.

SHIFT THE TRACTOR INTO A LOWER GEAR WHEN TRANSPORTING DOWN STEEP SLOPES OR HILLS.

DO NOT TRANSPORT UNLESS THE GRAIN DRILL REFLECTORS, LIGHTS, AND SMV EMBLEM ARE EASILY VISIBLE FROM THE REAR.

NEVER TRANSPORT THE GRAIN DRILL FASTER THAN 32 KM/H (20 MPH). REDUCE SPEED WHEN TRAVELING OVER ROUGH GROUND OR WITH THE BOX FULL. (CRUSTBUSTER DOES NOT RECOMMEND TRANSPORTING WITH A FULL GRAIN BOX.)

Safety Decals

REMEMBER: If Safety signs have been damaged, removed, become illegible or parts replaced without decals, new decals must be applied. New decals are available from your authorized distributor or factory. Decal part numbers and locations shown below.

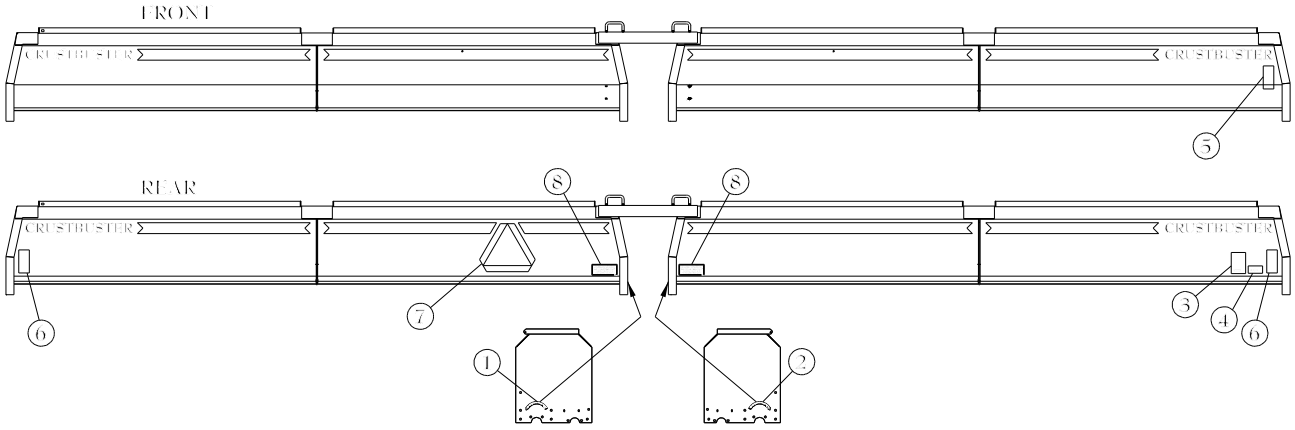

Item	Qty	Part No.	Description
1	1	608760	Seed Slot Adjustment (CCW)
2	1	608778	Seed Slot Adjustment (CW)
3	1	600825	Drill Information
4	1	601732	Seed Slot Caution
5	1	600429	Amber Reflector
6	2	600437	Red Reflector
7	1	604512	Slow Moving Vehicle
8	2	608794	Store Seed Gauge

Dealer Set-up and Assembly

The drill is shipped completely set-up. Check all fasteners to be sure none have loosened during shipment.

Check all seed rotors to be sure they are closed and gauge indicates zero. *See page 10.*

Lubrication, Maintenance, and Service

Proper maintenance will extend the life of your drill and give you years of excellent performance. Refer to repair part drawings to locate all bearings for lubrication. Use a high quality grease in pivot points and bearings. On greaseable sealed bearings, be careful not to over-grease and destroy the dirt seal. Pay attention to recommended intervals.

Oil chains with a chain lube. A light penetrating oil or liquid graphite should be used on seed cups initially and at the end of each season. Clean cups with air pressure or vacuum before applying penetrating oil.

Do Not Attempt To Service Your Drill While It Is In Motion!

Before Operating This Equipment

Read and understand this owner's manual.



Safety & Set-Up Instructions

○ **NEVER ALLOW ANYONE TO RIDE THE DRILL!**

○ Check lug nuts or bolts. Torque to 100 ft. lbs. after approximately 1 mile and periodically after.

Field Operating Checklist

____ Inflate tires to recommended air pressure. Gauge wheels - 32 psi

____ Lubrication as required. *See page 7.*

____ Seed shafts turned manually to check for obstructions and improper chain alignment on drive sprockets.

____ Correct sprocket selection and slot width for seed type and size.

____ Calibration as required for accuracy.

____ Lift and pin support stands UP before transporting or operating drill.

____ Three point center link is adjusted for level drill operation.

____ Drill is hooked secure to tractor.

____ Down pressure set for soil conditions.

____ Record acre meter reading.

____ Do not back up with drill lowered.

____ Lower drill while moving forward to avoid plugging openers.

____ Check seed depth and adjust accordingly.

____ Allow no riders.

____ If transporting drill while box is full, turn drive wheels manually before drilling to assure compaction has not stopped seed flow. (CrustBuster does not recommend transporting with full grain box.)

____ Do not turn sharply with drill in ground.

3-Point Hitch Drills

Prepare for field use

Drills are equipped with bolt on hitches for category II or III tractor 3-point lift.

Back tractor to drill while aligning 3-point links with lower hitch points on drill. Secure lower links with pins provided. Attach upper third link to drill and adjust to level drill frame.

Make sure tractor has enough front weight to retain steering control while transporting drill. Refer to tractor operator's manual for front weight and 3-point information.

Raise drill with 3-point lift. Lift and pin parking stands.

Transporting

Avoid transporting with full seed box. The extra weight can make tractor control difficult at transport speed.

Slow down when turning and crossing rough terrain.

Observe all laws and regulations concerning transport on public roads. Be sure all warning signs and devices are visible and working properly.

Drill Opener

Setting Down Pressure

Opener pressure setting is easy and allows separate settings for tire compaction areas to different soil conditions from field to field. Screw mechanism allows you to turn the pressure up or down. The locking nut locks the desired setting from 95 lbs. to 160 lbs. per opener.

To adjust spring, loosen locking nut. Tighten adjusting nut to increase opener down pressure. A spring length of 11 3/4" is 95 lbs. opener down pressure. A spring length of 10 3/4" is 160 lbs. opener down pressure. After adjusting, lock adjusting nut by jamming with locking nut.

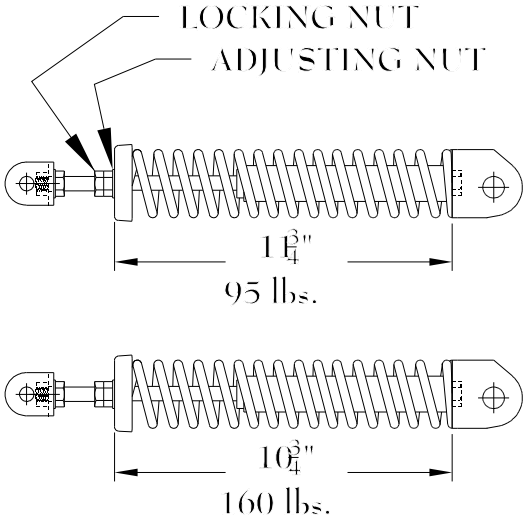

Drill Height

For best performance, the drill openers should be operated level. This is achieved with a frame height of approximately 27". Adjust gauge wheels to attain this height.

Openers operating at different levels on bedded ground may be adjusted up in the mounting bracket. Make sure to adjust spring bracket up. Refer to illustration below.

Row units that run in wheel tracks can be set with heavier down pressure to assure solid press wheel action.

Individual presswheels may be set to correct for wheel track compaction. Usually, these will only need to be adjusted once if the same tractor is pulling the drill the entire season. At the rear of the opener, a T-handle stops the single press wheel arm. Lift handle and move to achieve the desired depth control.

Move T-handle FORWARD to place seed more shallow. Each notch changes seeding depth approximately 5/16“.

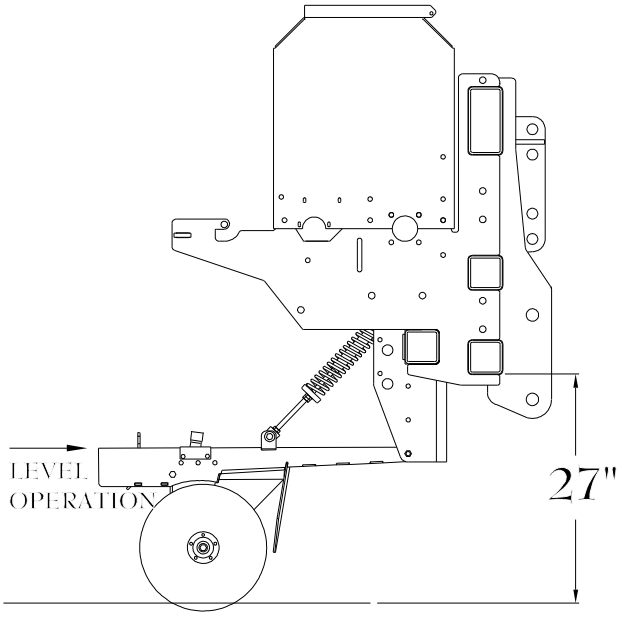

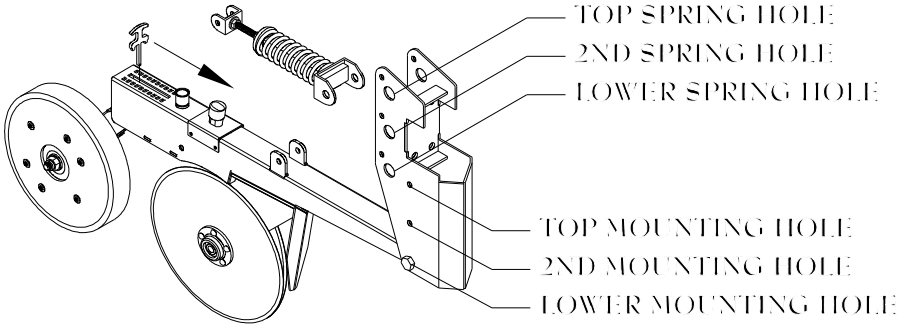

Wobble Slot Seed Cup Adjustments and Service

The wobble slot seed cups should be checked against the slot gauge initially and anytime service has been performed on the seed shaft or individual seed cups.

To verify that all seed cups are set the same on the shaft, start with all cups fully closed. A slight crack between the cup halves would be considered normal tolerance. If any individual cup is not “zeroed out”, open slot width using the adjusting handle, loosen allen set screws and adjust to equal others on shaft.

To determine if the gauge is reflecting the correct seed cup slot width, close the seed cups using the adjusting handle. Loosen the nuts which hold the gauge mount to seed cup. Make sure gauge needle is firmly against the slot half and secure gauge plate to read zero.

Turn adjusting handle counter clockwise to open slot to desired width. *(Refer to seed rate charts pages 15 to 18.)* Lock adjusting handle with wing nut.

Small changes in rate can be made by opening or closing slot width. To close the slot width with grain in the box, close the slot down a maximum of 1/8" and then rotate the shaft one turn to clear the slot. Repeat this process until the desired slot width is selected.

Seeding rate is affected by seed size, seed treatments, foreign material, and test weight. Refer to seed rate charts as guidelines for desired seeding rates.

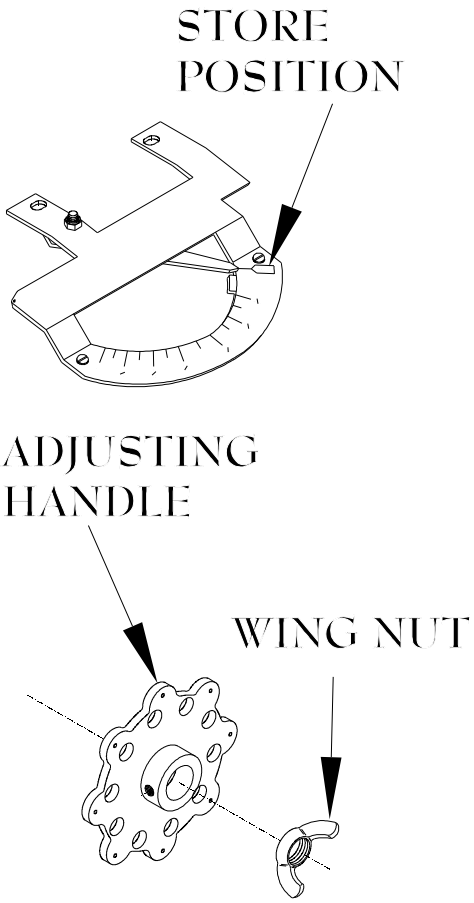

Chain Tension on Drive Shaft

When making sprocket changes to the seed shaft, tighten chain to leave approximately 1/2" of flex. The final sprocket must allow the hex shaft to slide within the sprocket when the adjusting handle is turned. If the chain is too tight, bowing and binding of box end will occur making seed cup adjustment difficult. Lightly lubricate the shaft where the sprocket will slide.

DO NOT OVERTIGHTEN CHAIN.

Calibration and Seed Rates

Calibration/Drilling Rates

Planting the right rate can be frustrating. Sometimes the end result is not what the rate chart indicates. Seeding rate is affected by seed size, seed treatments, foreign material, test weight, and tire air pressure.

1. Always plant clean seed.
2. Check tire air pressure.
3. Seed treatments vary by type and time of application.

Some seeds are treated at the processor. Drill box treatments are common methods of application. Each of these can "gum" up the wobble slot cup halves and reduce final seeding rate. Treated seed often flows differently than non-treated seed.

A general method for checking quantities drilled is as follows:

1. Set drill for desired seeding rate.
2. Fill the box level; then pull drill for a short distance to settle seed. Refill box exactly level full.
3. Drill a calculated one acre.
4. Carefully weigh the seed required to refill the box level full.
5. Compare the amount used versus that stated on the rate chart.
6. Adjust seeding rate by changing the sprocket combination or wobble slot width.

A stationary rate check can be made by manually turning the drive wheel. To complete this procedure:

1. Set drill for desired seeding rate.
2. Place a sufficient amount of seed in box to complete test. Raise drill.
3. Place a tarp or other material under opener seed drop to catch seed.
4. Turn drive wheel the required number of times to plant one-tenth acre. (See chart below).

Drill Width	Turns of Drive Wheel
27'	21
30'	18

5. Collect seed from tarp and carefully weigh it.
6. This weight times ten is the calculated seed rate per acre.
7. If this is not the desired seeding rate adjust by changing sprocket combination or wobble slot width.
8. Repeat rate check.

Another method involves catching seed from one or more seed cups and utilizing a density scale to determine actual rates. These scales are commercially available, inexpensive and very easy to use. Information can be obtained from CrustBuster®/Speed King, Inc.

Drive Wheel

The drive wheel should not require any adjustment. Make sure frame height is low enough to cause drive wheel to stay firmly in contact with ground.

Scraper Blade Replacement

Opener blade inside scrapers are spring loaded and require no adjustment. To replace the scraper blades, remove rear lock nut and slide both blades from stem. Assemble with new blades and replace onto stem being careful not to overtighten lock nut.

NOTE: Do not over tighten lock nut. Be sure scrapers move freely. Failure to do so will result in damage to scrapers and proper operation of scrapers.

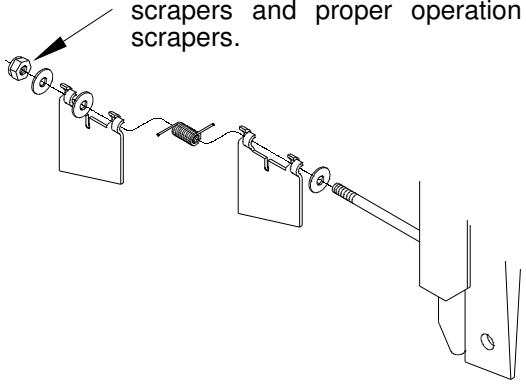

30" Row Set-up

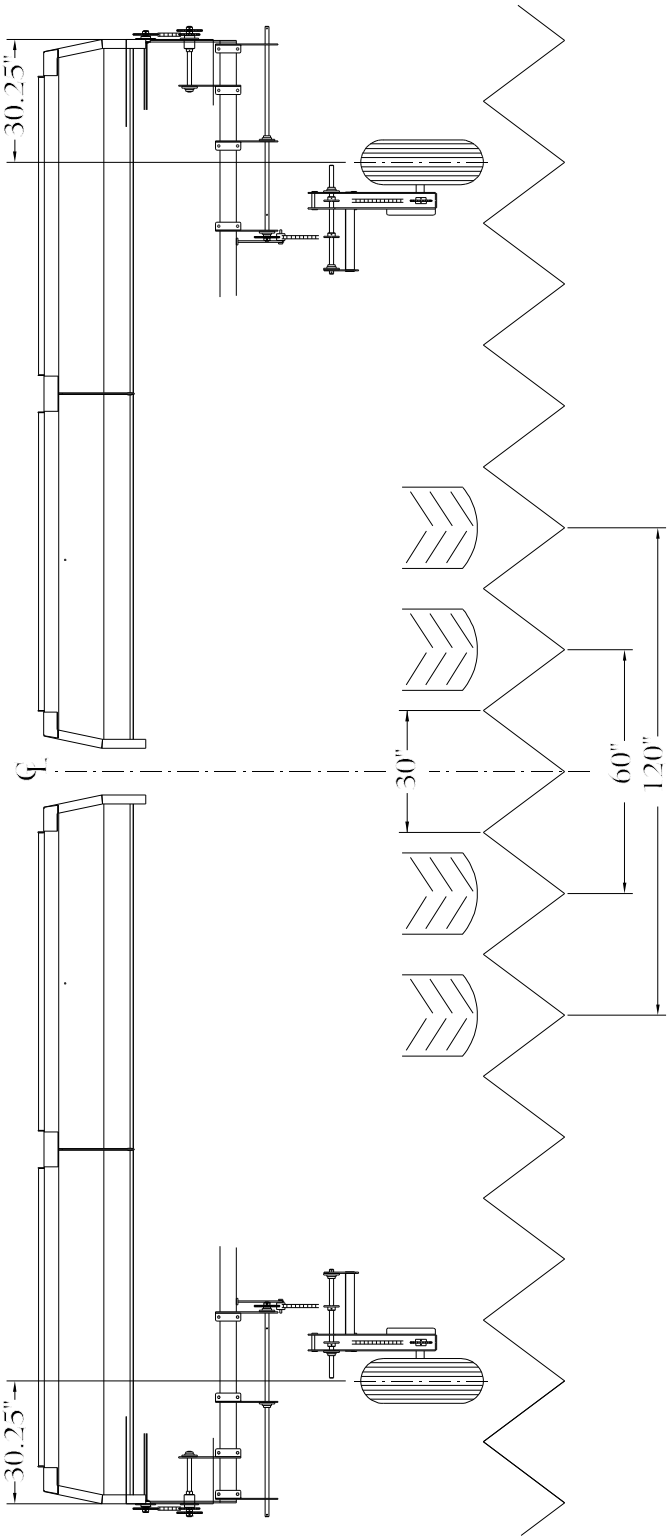

36" Row Set-up

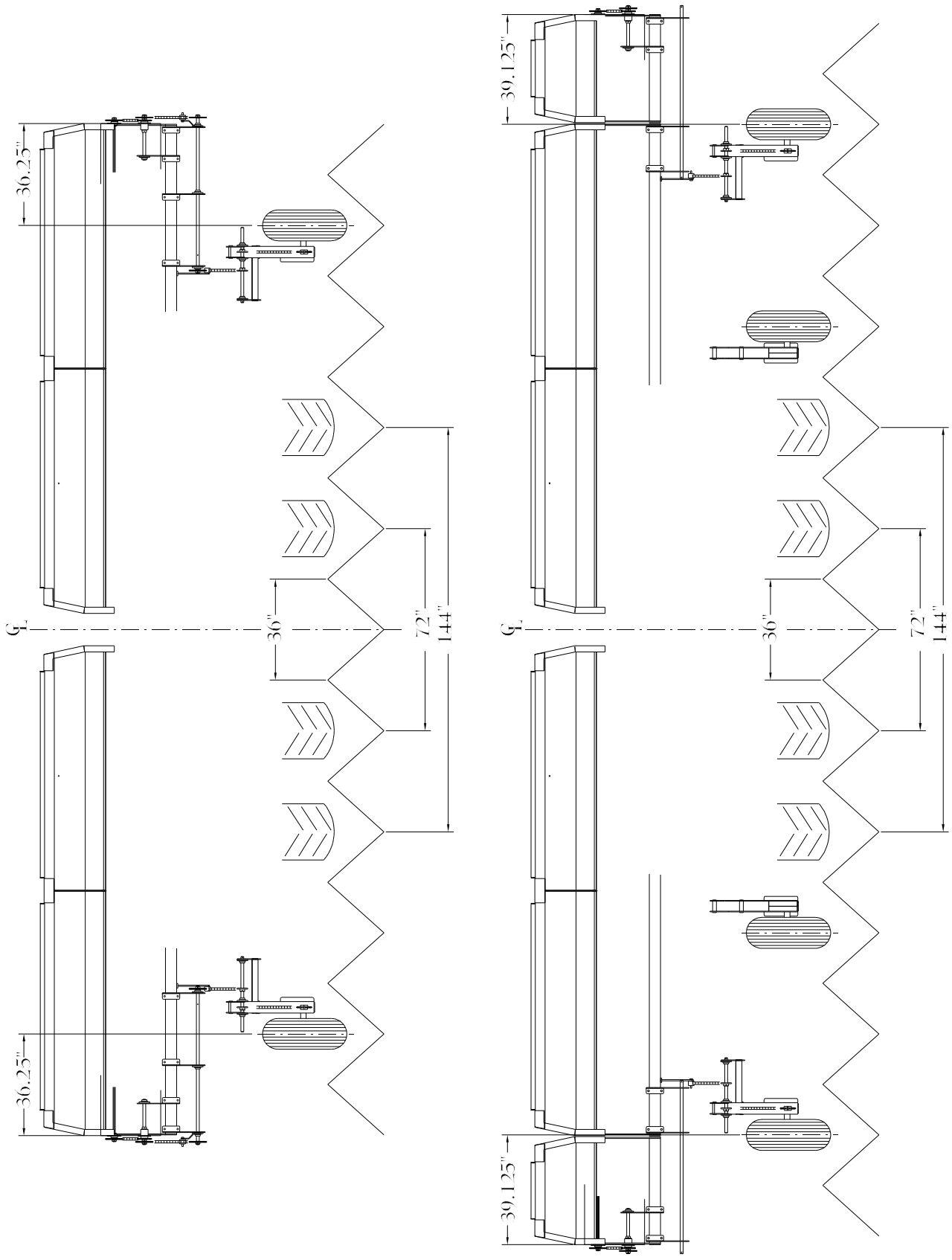

Sprocket Locations

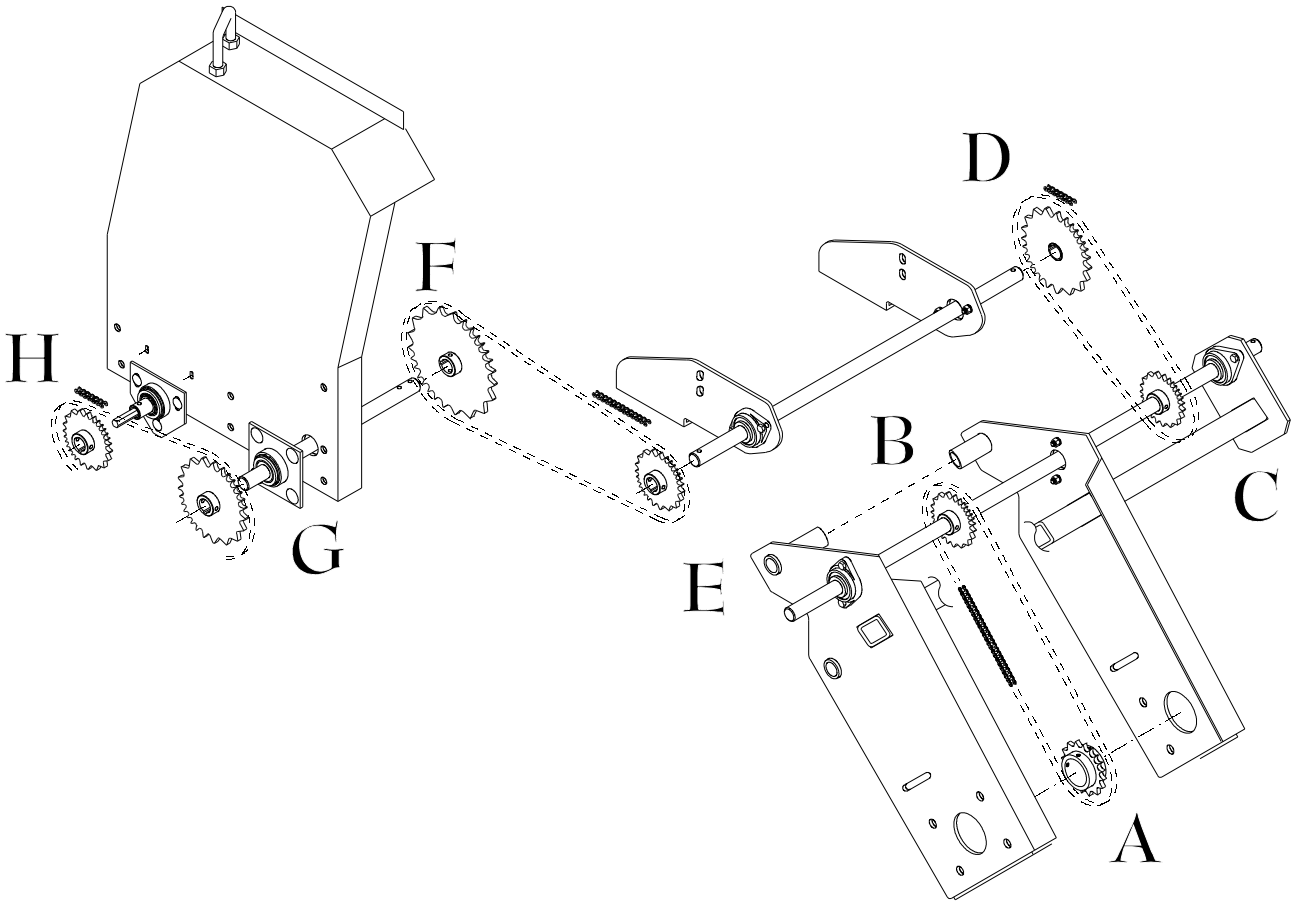

Seed Rate Charts

For 7½", 8", & 10" Spacing Drills.
For 6" Spacing Drills, the actual rate will be 1/3 more than shown in chart.

ALFALFA

Sprockets						Slot Width	
C	D	E	F	G	H	1/8"	1/4"
18	30	20	37	12	44	3	6
				12	37	4	6½
				12	30	4½	8
				20	37	6	11
				12	20	7	12
				20	30	7½	13
				20	25	9	16
				25	30	10	16½
				20	20	11	20
18	20	30	37	20	37	14	24
				12	20	16	27
				20	30	17½	30
				20	25	21	35
				25	30	22	37½
				20	20	26	45
				30	25	31	54

BARLEY

Sprockets						Slot Width		
C	D	E	F	G	H	½"	5/8"	3/4"
18	30	20	37	20	30	16	20	24
				20	25	19	24	29
				25	30	20	25	30
				20	20	24	30	36
18	20	30	37	20	37	30	37½	44
				12	20	32½	41	49
				20	30	36	45	55
				20	25	44	55	65
				25	30	46	56	69
				20	20	55	69	82½
				30	25	66	82½	99
18	20	30	20	25	37	69	85	102½
				20	25	82½	102½	122½
				25	30	85	105	126
				37	37	101	126	151
				30	25	121	151	182½
				25	20	126	157½	190

CORN

Sprockets						Slot Width		
C	D	E	F	G	H	½"	5/8"	3/4"
18	30	20	37	20	30	9	12½	15
				20	25	11	15	18
				25	30	11½	16	19
18	20	30	37	20	20	13	19	22½
				20	37	16	22½	27½
				12	20	17½	25	30
				20	30	19	27½	34
				20	25	23	34	40
				25	30	24	35	42½
				20	20	29	41	50
				30	25	35	50	60
18	20	30	20	25	37	36	52½	62½
				20	25	44	62½	75
				25	30	45	64	77½
				37	37	54	77½	92½
				30	25	65	92½	111
				25	20	67½	96	116
				30	20	81	116	140

COTTON

Sprockets						Slot Width		
C	D	E	F	G	H	1/2"	5/8"	3/4"
18	30	20	37	20	30	12	14	18
				20	25	14	17½	22
				25	30	15	18	22½
				20	20	18	22	27½
18	20	30	37	20	37	22	26	32½
				12	20	24	29	36
				20	30	27½	32½	41
				20	25	32½	39	49
				25	30	34	41	51
				20	20	41	49	61
				30	25	49	59	74
18	20	30	20	25	37	51	61	76
				20	25	61	74	91
				25	30	62½	75	94
				37	37	75	90	112½
				30	25	90	109	135
				25	20	94	114	141
				30	20	112½	136	169

Seed Rate Charts

For 7½", 8", & 10" Spacing Drills.
For 6" Spacing Drills, the actual rate will be 1/3 more than shown in chart.

FESCUE

Sprockets						Slot Width		
C	D	E	F	G	H	3/8"	1/2"	5/8"
18	30	20	37	12	44	2½	4	4½
				12	37	3	4½	6
				12	30	4	6	7
				20	37	5	7½	9
				12	20	6	8	11
				20	30	6½	9	11½
				20	25	7½	11	14
				25	30	8	11½	14½
				20	20	10	14	17½
18	20	30	37	20	37	12	16	21
				12	20	13	18	23
				20	30	15	21	26
				20	25	17½	24	31
				25	30	18	25	32½
				20	20	22	30	39
				30	25	26	36	47½

MILLET

Sprockets						Slot Width	
C	D	E	F	G	H	1/8"	1/4"
18	30	20	37	12	44	2	4
				12	37	2½	6
				12	30	4	7
				20	37	4½	9
				12	20	5	11
				20	30	6	11½
				20	25	6½	14
				25	30	7	14½
				20	20	8	17½
18	20	30	37	20	37	10	21
				12	20	11	23
				20	30	12½	26
				20	25	15	31
				25	30	16	32½
				20	20	19	39
				30	25	22½	47½
18	20	30	20	25	37	24	49
				20	25	29	59
				25	30	30	60
				37	37	35	72½

MILO

Sprockets						Slot Width		
C	D	E	F	G	H	1/4"	3/8"	1/2"
18	30	20	37	12	44	4	7	9
				12	37	4½	8	11
				12	30	5	10	12½
				20	37	7	13	17½
				12	20	8	15	19
				20	30	9	16	21
				20	25	11	20	25
				25	30	11½	21	26
				20	20	13	24	32½
18	20	30	37	20	37	16	30	39
				12	20	18	34	44
				20	30	20	37½	47½
				20	25	24	45	57½
				25	30	25	46	60
				20	20	30	56	72½
				30	25	36	66	86
18	20	30	20	25	37	37½	70	90
				20	25	45	84	107½
				25	30	46	86	111
				37	37	56	102½	134

OATS

Sprockets						Slot Width		
C	D	E	F	G	H	1/2"	5/8"	3/4"
18	20	30	37	20	37	19	24	27½
				12	20	21	27½	31
				20	30	23	30	34
				20	25	27½	36	41
				25	30	29	37½	42½
				20	20	35	45	51
				30	25	42½	54	61
18	20	30	20	25	37	44	56	64
				20	25	52½	67½	76
				25	30	54	70	79
				37	37	65	84	95
				30	25	77½	100	114
				25	20	81	104	119
				30	20	97½	125	142½

Seed Rate Charts

For 7½", 8", & 10" Spacing Drills.
For 6" Spacing Drills, the actual rate will be 1/3 more than shown in chart.

PINTO BEANS

Sprockets						Slot Width		
C	D	E	F	G	H	1/2"	5/8"	3/4"
18	20	30	37	20	37	19	25	31
				12	20	21	29	34
				20	30	24	31	37½
				20	25	29	37½	46
				25	30	30	39	47½
				20	20	35	47½	57½
				30	25	42½	56	69
18	20	30	20	25	37	45	59	71
				20	25	54	71	85
				25	30	55	72½	87½
				37	37	66	87½	105
				30	25	79	105	126
				25	20	82½	109	132½
				30	20	99	131	159

RICE

Sprockets						Slot Width		
C	D	E	F	G	H	1/2"	5/8"	3/4"
18	20	30	37	20	37	26	32½	39
				12	20	3.	36	42½
				20	30	32½	41	47½
				20	25	39	49	57½
				25	30	41	51	60
				20	20	49	61	71
				30	25	59	74	86
18	20	30	20	25	37	61	76	89
				20	25	74	91	107½
				25	30	76	95	110
				37	37	91	114	132½
				30	25	109	136	159
				25	20	114	141	165
				30	20	136	170	199

RYE

Sprockets						Slot Width		
C	D	E	F	G	H	1/2"	5/8"	3/4"
18	30	20	37	20	30	21	26	34
				20	25	24	32½	41
				25	30	26	34	42½
				20	20	31	40	51
18	20	30	37	20	37	37½	49	62½
				12	20	41	54	69
				20	30	46	60	76
				20	25	55	71	92½
				25	30	57½	75	96
				20	20	69	90	115
				30	25	82½	107½	139
18	20	30	20	25	37	86	112½	144
				20	25	104	135	172½
				25	30	106	139	177½
				37	37	127½	166	212½
				30	25	154	199	255

SOYBEANS

Sprockets						Slot Width		
C	D	E	F	G	H	1/2"	5/8"	3/4"
18	20	30	37	20	37	26	31	36
				12	20	29	35	40
				20	30	32½	39	45
				20	25	39	46	54
				25	30	40	47½	56
				20	20	47½	57½	67½
				30	25	57½	69	81
18	20	30	20	25	37	60	72½	84
				20	25		86	101
				25	30		89	104
				37	37		106	125
				30	25		127½	150
				25	20		134	156
				30	20		160	187½

Seed Rate Charts

For 7½", 8", & 10" Spacing Drills.
For 6" Spacing Drills, the actual rate will be 1/3 more than shown in chart.

SUNFLOWERS

Sprockets						Slot Width		
C	D	E	F	G	H	1/2"	5/8"	3/4"
18	30	20	37	12	44	3	4	5
				12	37	4	5	6
				12	30	4½	6	7½
				20	37	6	8	10
				12	20	7	9	11
				20	30	8	10	12½
				20	25	9	12½	15
				25	30	10	13	16
				20	20	12	16	19
18	20	30	37	20	37	14	19	22½
				12	20	16	21	25
				20	30	17½	23	27½
				20	25	21	27½	34
				25	30	22	29	35
				20	20	26	35	42½
				30	25	32½	41	50

WHEAT

Sprockets						Slot Width		
C	D	E	F	G	H	1/2"	5/8"	3/4"
18	30	20	37	12	20	19	25	30
				20	30	21	29	34
				20	25	26	34	40
				25	30	27½	35	41
				20	20	32½	42½	50
18	20	30	37	20	37	40	51	61
				12	20	44	57½	67½
				20	30	49	64	75
				20	25	59	76	90
				25	30	61	80	94
				20	20	74	96	112½
				30	25	89	115	135
18	20	30	20	25	37	92½	120	141
				20	25	110	144	169
				25	30	114	147½	174
				37	37	136	177½	209
				30	25	164	212½	250

5500 Frame

Item	Qty	Part No.	Description
1	1	969592	Frame 5530
	1	970335	Frame 5527
2	1	969824	Jack Stand Mount Right
3	1	969832	Jack Stand Mount Left
4	2	969816	Jack Stand
5	10	335125	HHCS 3/4" x 2"
6	10	330332	Lock Washer 3/4"
7	10	330290	Hex Nut 3/4"
8	2	330449	Clevis Pin 3/4" x 4"
9	4	330456	Klik Pin 7/16"
10	2	850792	Pin 1 7/16" w/Roll Pin
11	2	334425	Klik Pin 7/16" w/2" Ring
12	1	302927	Pin 1 1/4"

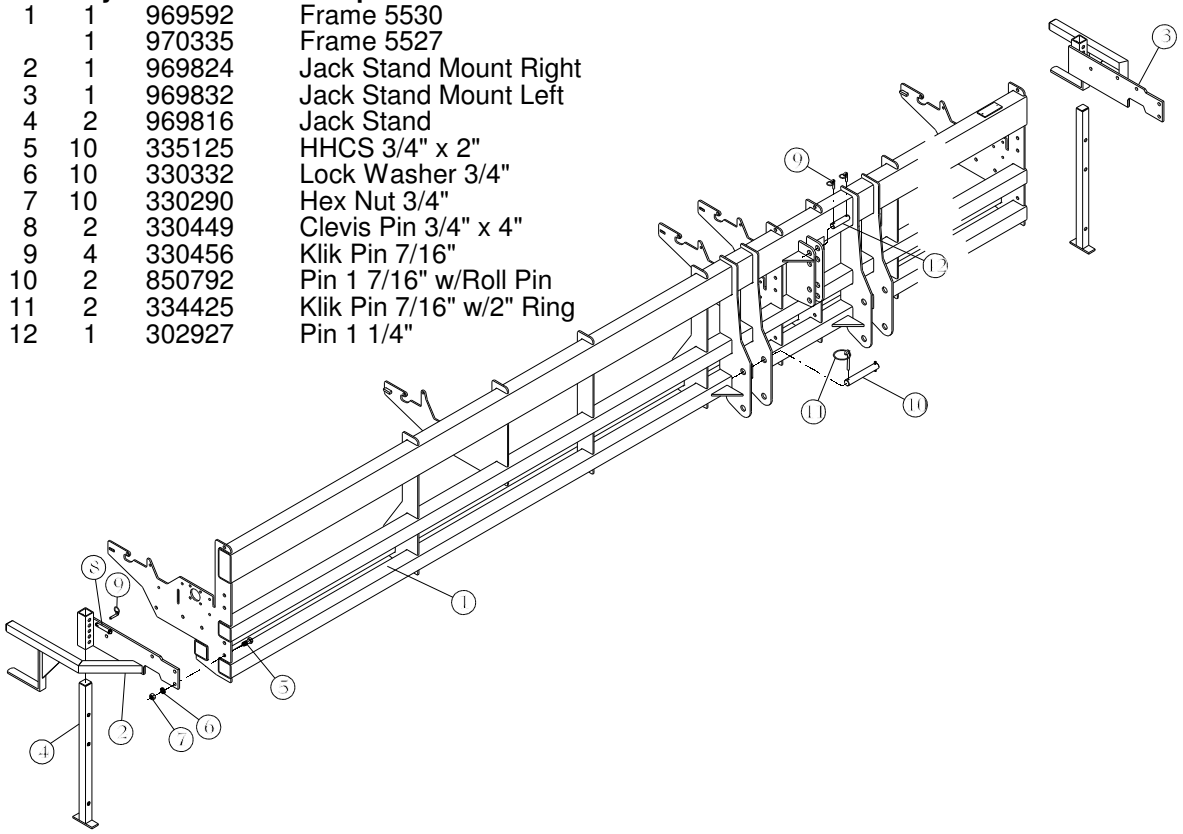

5500 Grain Box

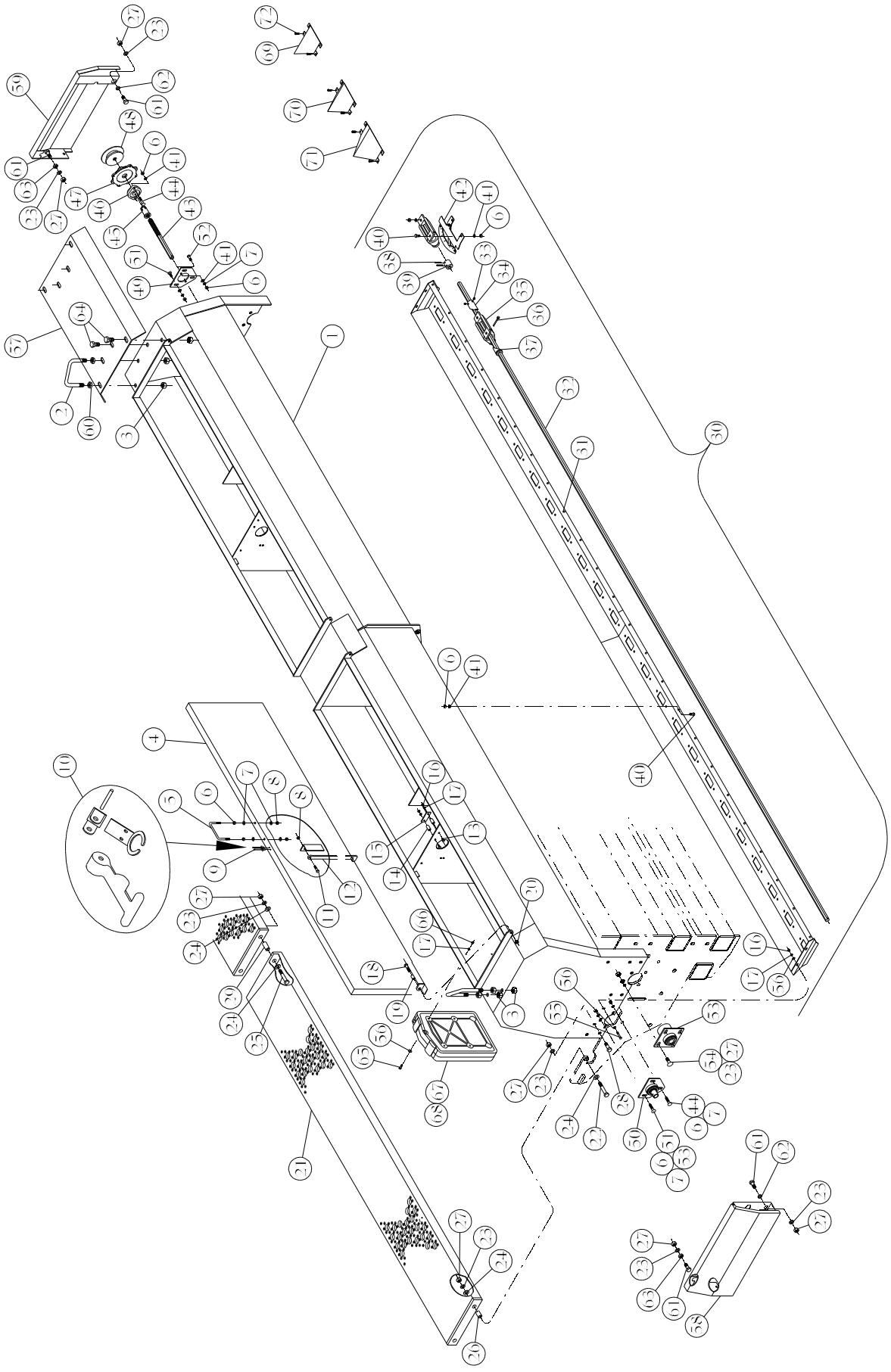

5500 Grain Box

Item	Part No.	Description
1	969709	Grain Box **5530**
	970350	Grain Box **5527**
2	335737	Box Handle
3	330571	Hex Nut 5/8"
4	969691	Grain Box Lid **5530**
	970376	Grain Box Lid **5527**
5	308122	Box Lid Handle
6	330811	Hex Nut 5/16"
7	330852	Flat Washer 5/16"
8	331611	Hex Nylock 5/16"
9	601989	Pop Rivet 3/16" x 1/4"
10	570341	Lid Latch w/hook
11	01011600	HHCS 5/16" x 1 1/4"
12	221317	Lid Latch Bracket
13	335133	HHCS 1/4" x 1 3/4"
14	145144	Lid Latch Spool
15	190942	Lid Latch
16	332205	Hex Nut 1/4"
17	330050	Lock Washer 1/4"
18	335703	HHCS 3/8" x 1½"
19	149385	Lid Bushing
20	330837	Hex Nylock 3/8"
21	969683	Walk Board **5530**
	970392	Walk Board **5527**
22	336644	HHCS ½" x 2 1/4"
23	330142	Lock Washer ½"
24	330159	Flat Washer ½"
25	334946	HHCS ½" x 3"
26	154211	Walk Board Bushing
27	330134	Hex Nut ½"
28	01147800	HHCS ½" x 1½"
29	154229	Walk Board Spool
30		Box Bottom Assembly Includes #31-#43)
	875260	5530 x 7½" Left 48, 50, & 60 Cups
	875278	5530 x 7½" Right 48, 50, & 60 Cups
	875799	5530 x 10" Left 36 Cups
	875781	5530 x 10" Right 36 Cups
	875831	5527 x 6" Left 50 Cups
	875823	5527 x 6" Right 50 Cups
	875757	5527 x 8" Left 40 Cups
	875765	5527 x 8" Right 40 Cups
	875732	5527 x 10" Left 32 Cups
	875740	5527 x 10" Right 32 Cups

Item	Part No.	Description
31		Box Bottom Only
	969634	5530 x 7½" 48, 50, & 60 Cups
	969642	5530 x 10" 36 Cups
	970475	5527 x 6" 50 Cups
	970418	5527 x 8" 40 Cups
	970400	5527 x 10" 32 Cups
32	312025	Hex Shaft **5530**
	312165	Hex Shaft **5527**
33	334516	Set Screw 1/4"-28 x 1/4" Cone Point
34	550517	Wobble Slot Adj Slide Long
35	550483	Cast Seed Cup
36	601716	Wobble Slot Lock Bolt Pin
37	550525	Wobble Slot Half w/groove
38	337485	Roll Pin 3/16" x 1 1/4"
39	141895	Shaft Coupler
40	01144500	HHCS 5/16" x 3/4"
41	330845	Lock Washer 5/16"
42	874552	Seed Gauge -Rear Mount
43	310888	Hex Shaft 5/8" x 10 7/32"
44	01261700	Carriage Bolt 5/16" x 1½"
45	312785	Adjustment Spool
46	03001500	Bearing 1" Flange
47	874834	Adjustment Handle
48	972851	Adjustment Lock Plate
49	268573	Bearing Bracket
50	865758	Drive End Bracket w/bearing
51	01047000	Carriage Bolt 5/16" x 1"
52	01010800	HHCS 5/16" x 1"
53	865733	Drive Bracket w/bearing
54	01212000	Carriage Bolt ½" x 1"
55	331835	HHCS 1/4" x 1"
56	02016400	Flat Washer 1/4"
57	268185	Box Splice Plate
58	969725	Chain Guard Right
59	958058	Chain Guard Left
60	331538	Jam Nut 5/8"
61	01180900	HHCS ½" x 1 1/4"
62	150599	Chain Guard Bushing
63	332262	Jam Nut ½"
64	01088400	HHCS 5/8" x 1 1/4"
65	01057900	HHCS 1/4" x 3/4"
66	330522	Hex Nylock 1/4"
67	607416	Manual Case
68	609412	Owner's Manual
69	260315	Diverter (5 7/8")
70	260323	Diverter (6½")
71	260331	Diverter (8 1/4")
72	337881	Screw ½" Self Tapping

5500 Drive

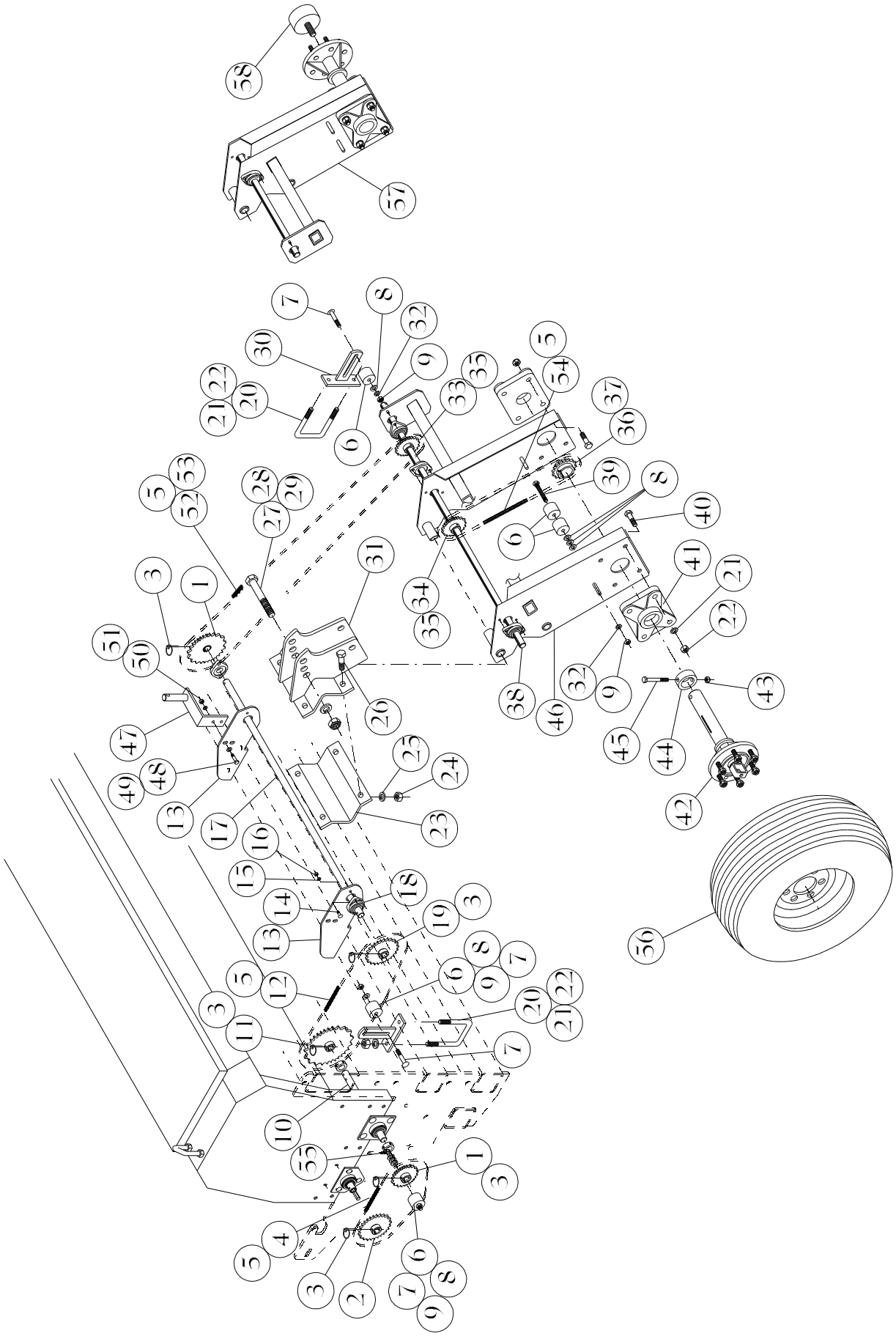

5500 Drive

Item	Qty	Part No.	Description
1	4	935080	Sprocket 2050 20T -1" Bore
2	2	935098	Sprocket 2050 25T -1" Bore
3	10	338392	Klik Pin 1/4" -1 3/4" Ring
4	2	432690	Chain 2050 29 Links
5	6	430983	Chain Connector Link 2050
6	10	571273	Nylon Idler
7	6	335323	Carriage Bolt ½" x 3"
8	16	330159	Flat Washer ½"
9	8	330134	Hex Nut ½"
10	2	310037	Shaft 1" x 7 1/16"
11	2	935114	Sprocket 2050 37T -1" Bore
12	2	431825	Chain 2050 47 Links
13	4	231365	Drive Bracket
14	20	01047000	Carriage Bolt 5/16" x 1
15	20	330845	Lock Washer 5/16"
16	20	330811	Hex Nut 5/16"
17			Drive Shaft 1"
	2	312306	5530 (36 & 50 cups)
	2	312256	5530 (60 cups)
	2	312041	5527 (32 & 40 cups) 5530 (48 cups)
	2	312264	5527 (50 cups)
18	10	03001500	Bearing 1" 2B Flange
19	2	935106	Sprocket 2050 30T -1" Bore
20	8	333088	U-Bolt 5/8" x 4" x 5 1/4"
21	16	330878	Lock Washer 5/8"
22	16	330571	Hex Nut 5/8"
23	2	960310	Mount Plate Cap
24	8	330290	Hex Nut 3/4"
25	8	330332	Lock Washer 3/4"
26	8	335174	HHCS 3/4" x 2½"
27	2	334938	HHCS 1" x 7"
28	2	330399	Lock Washer 1"
29	2	330381	Hex Nut 1"
30	2	969865	Idler Bracket
31	2	969576	Wheel Mount
32	2	330142	Lock Washer ½"
33	2	957753	Sprocket 2050 18T -1"B Key & Set Screws
34	2	957753	Sprocket 2050 18T -1"B Key & Set Screws (6" & 8" Spacings)
	2	954933	Sprocket 2050 20T Key & Set Screws (7½" & 10" Spacings
35	4	602367	Key 1/4" x 1"
36	2	954370	Sprocket 2050 18T -2"B Key & Set Screws (6",7½" & 8" Spacings)
	2	953216	Sprocket 2050 25T -2"B Key & Set Screws (10" Spacing)
37	2	605576	Key 3/16" x 1 1/4"
38	2	309997	Shaft 1" x 26 3/4"
39	2	01225200	HHCS ½" x 5"
40	16	01071000	HHCS 5/8" x 2"
41	4	403279	Bearing 2" 4B Flange w/Triple Seal
42	2	961870	Wing Wheel Spindle
43	2	331363	Hex Nylock ½"
44	2	145623	Spindle Bushing
45	2	330092	HHCS ½" x 4"
46	1	971333	Wheel Arm Right
47	2	970822	Sprocket Carrier
48	4	335703	HHCS 3/8" x 1½"
49	4	330894	Flat Washer 3/8"
50	4	330043	Lock Washer 3/8"
51	4	330035	Hex Nut 3/8"
52	2	431833	Chain 2050 x 25 Links
53	2	431270	Chain 2050 Offset Link
54	2	432872	Chain 2050 x 43 Links
55	4	06409700	Set Collar 1"
56	2	815175	Tire & Rim
		530329	Tire 11L x 15" 8 Ply
		530147	Rim 6 Bolt 15" x 10"
		530287	Valve Stem
		02990000	Decal "Check Wheel Lugs"
57	1	971341	Wheel Arm Left
58	1	609453	Acre Meter Electronic

5500 Opener Assembly

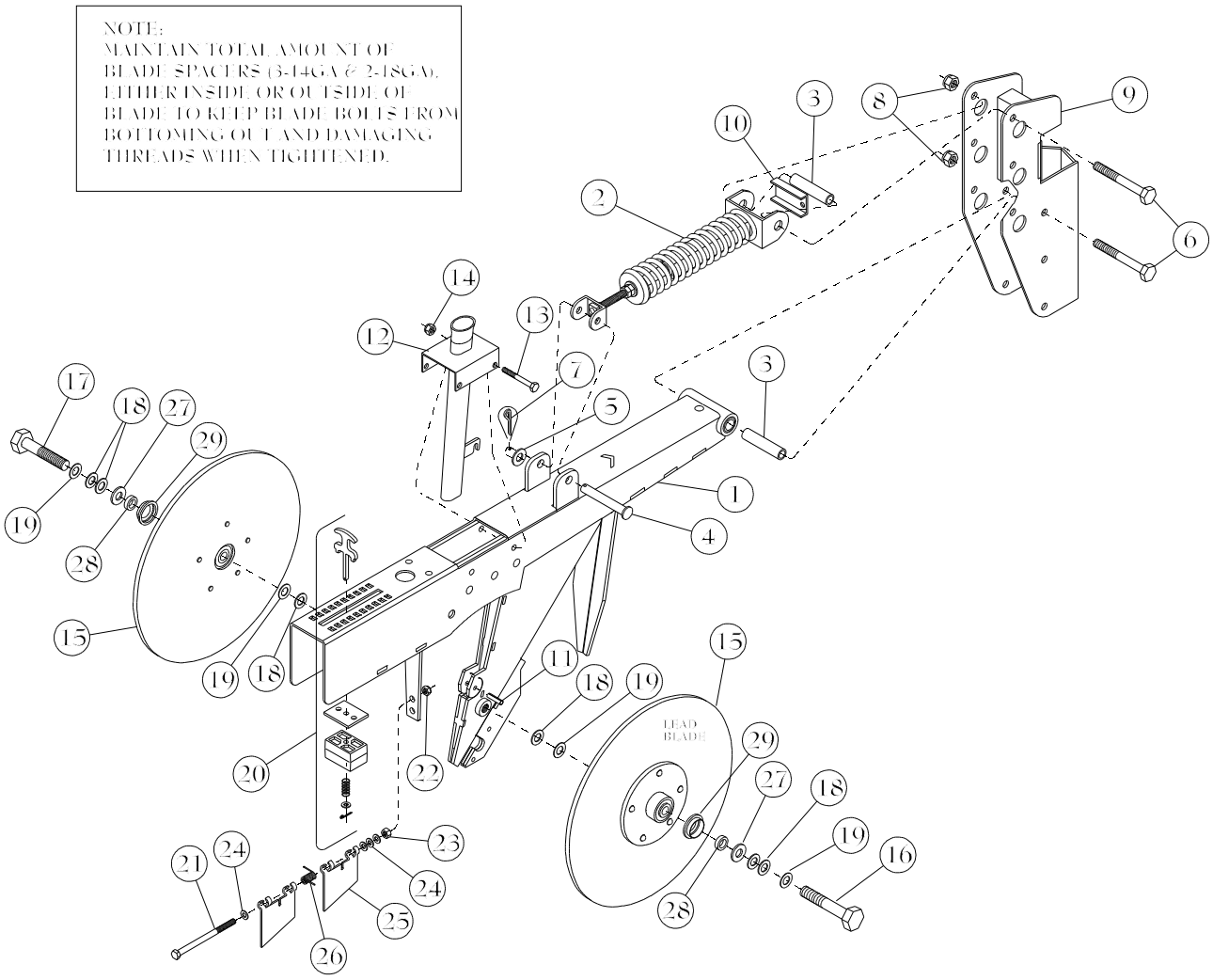

Item	Qty	Part No.	Description
		874784	Opener Assembly Long Right
		874792	Opener Assembly Long Left
		874800	Opener Assembly Short Right
		874818	Opener Assembly Short Left
1	1	967711	Opener Long Right (Shown)
		967729	Opener Long Left
		967984	Opener Short Right
		967992	Opener Short Left
2	1	874727	Spring Bracket Assembly
3	2	153601	Bushing
4	1	608752	Clevis Pin ½" x 3"
5	1	330159	Flat Washer ½"
6	2	338053	HHCS ½" x 5" Grade 8
7	1	330936	Cotter Pin 1/8" x 1"
8	2	331363	Hex Nylock ½"
9	1	968743	Mount Bracket Long
	1	968750	Mount Bracket Short
10	1	154013	Spring Adjustment Cap
11	1	338244	Roll Pin 1/4" x 1"

Item	Qty	Part No.	Description
12	1	968818	Seed Tube Bracket
13	2	338251	HHCS 1/4" x 3½"
14	2	330522	Hex Nylock 1/4"
15	2	859090	Blade Assembly 15" 3mm
16	1	01071000	HHCS 5/8" x 2"
17	1	337444	HHCS 5/8" x 2" Left Hand
18	6	330720	Machine Bushing 14 ga x 1 1/8 x 5/8"
19	4	333351	Machine Bushing 18 ga x 1 1/8 x 5/8"
20	1	609420	Press Wheel Adjustment
21	1	332965	HHCS 3/8" x 5½"
22	1	330837	Hex Nut 3/8"
23	1	330035	Hex Nut 3/8"
24	4	330852	Flat Washer 5/16"
25	2	257048	Scraper Plate
26	1	502153	Scraper Spring Right
	1	502146	Scraper Spring Left
27	2	330183	Flat Washer 5/8"
28	2	606558	Bushing 21/32" x1" x9/32"
29	2	400747	Seal

5500 Opener Blade Assembly

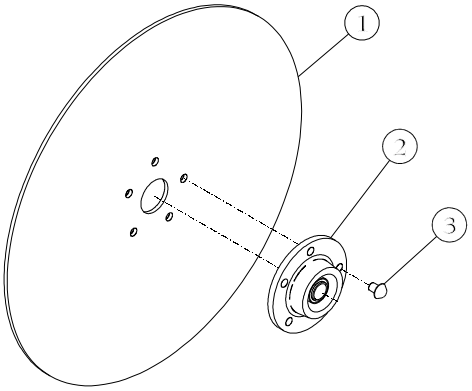

#859090
Blade Assembly

Item	Part No.	Description
1	501973	Blade 15" 3mm -.047 Concave
2	636860	Bearing & Flange Assembly
3	603084	Rivet 5/16" x 5/8" Button Head

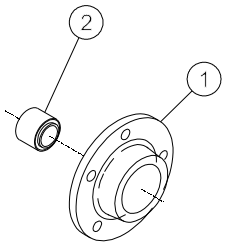

#636860
Bearing & Flange Assembly

Item	Part No.	Description
1	551234	Bearing Flange
2	401042	Bearing

5500 Presswheel Arm Assembly

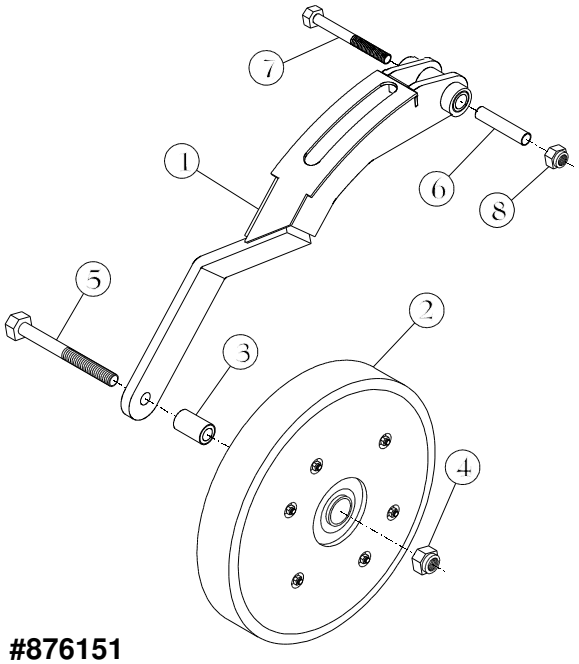

#876151

Item	Part No.	Description
1	968131	Arm w/ bushings
2	531095	Presswheel 2" x 13"
3	153692	Spacer Bushing
4	01572700	Nylock 5/8"
5	335182	HHCS 5/8" x 4½"
6	153593	Bushing
7	330092	HHCS ½" x 4"
8	331363	Nylock ½"

5500 Feed Tubes

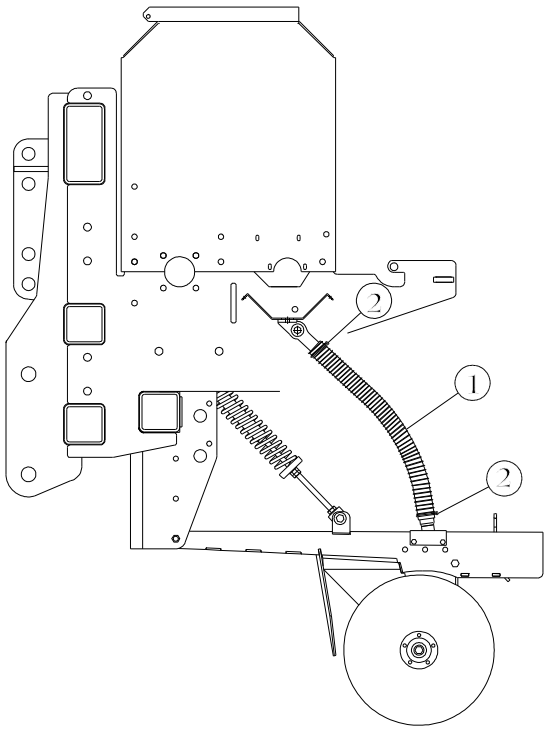

Item	Part No.	Description
1	571091	Feed Tube 51 Convolutions
2	604777	Clamp 1 3/8" x.165

5500 Extensions

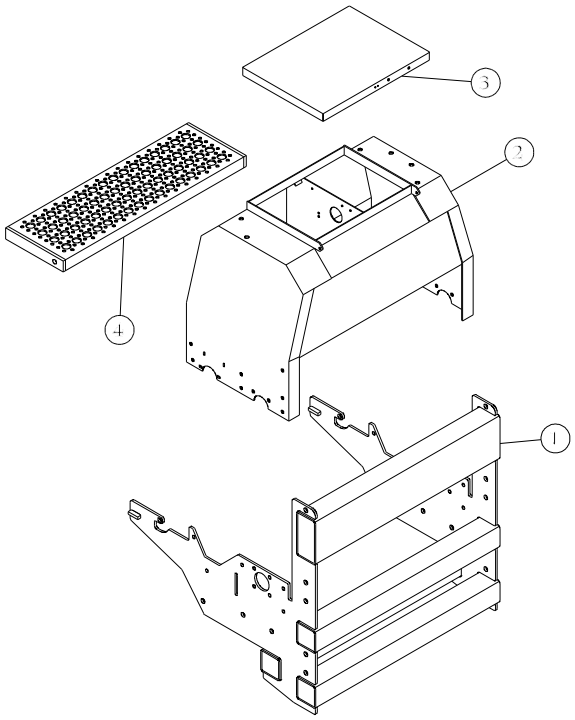

Item	Part No.	Description
1	970582	Frame
2	970566	Grain Box
3	970624	Box Lid
4	970640	Walk Board

5500 Shaft & Bin Monitor System

For Micro-Trak service and support, call 800-328-9613.

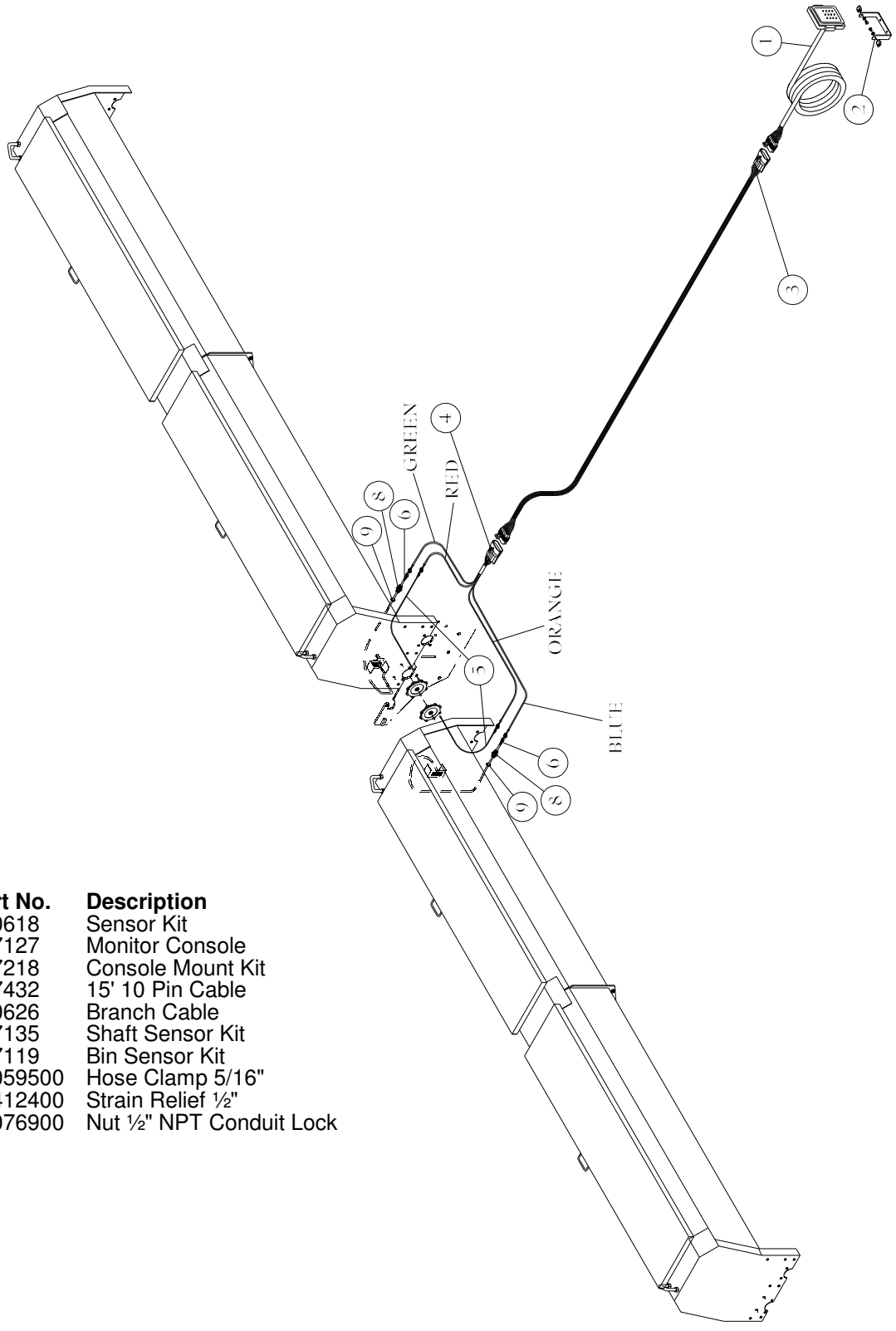

Item	Part No.	Description
	610618	Sensor Kit
1	607127	Monitor Console
2	607218	Console Mount Kit
3	607432	15' 10 Pin Cable
4	610626	Branch Cable
5	607135	Shaft Sensor Kit
6	607119	Bin Sensor Kit
7	01059500	Hose Clamp 5/16"
8	03412400	Strain Relief ½"
9	01076900	Nut ½" NPT Conduit Lock

CrustBuster
SPEED KING INC.

P.O.Box 1438 Dodge City, Kansas 67801 (620) 227-7106

All Grain Drills Final Assembly Check List

Drill Model # _____
Drill Serial # _____

SR. NO.	DESCRIPTION	CHECKED		INITIALS
		Yes	No	
1	Check console, Light kit, Chain bag			
2	No missing nuts & bolts and that all nuts & bolts are tight.			
3	Center lug bolts torque to 120 ft. lbs.			
4	All bearing zerks are greased.			
5	No hydraulic leaks			
6	All decals on and in proper place.			
7	Paint touched up and good overall appearance.			
8	Sprockets aligned properly & chains adjusted visually or with the laser check tool.			
9	Chains are not very tight and have some slack.			
10	Wobble slot open to ¾" and then close at ⅜".			
11	Gauge in store position.			
12	Test shaft trak. Box monitor and shaft.			
13	Final check on opener assembly.			
14	All lock out brackets in place			
15	Manual in box.			
16	No hardware left in box assemblies. (Bolts, Nuts, Tools)			
17	Walk boards aligned and evenly spaced.			
18	Lower seed tubes good and not smashed.			
19	If opener bars off, then seed tubes and extra parts in drill.			
20	Center drive properly aligned (For 4700 drills only).			
21	Center drive in road position (For 4700 drills only).			

Remarks: _____

Signature: _____ Date: _____